PORTABLE HOISTER

hulk
ISO 9001:2000 CERTIFIED

For use in small construction sites.
Easy to move floor to floor.
Very Portable and light weight.

Specifications:

Capacity	200Kg
Motor	3Kw, 3Phase
Lifting Height	60 Feet
Wire Rope	8 mm
Gear box	36:1
Rotation	360°

Convenient Light weight
3 piece design can be easily
dismantled and carried from
floor to floor

LOKPAL INDUSTRIES

A-6, Sector-3, Noida-201301, U.P., India | Tel.: +91-120-3065372 / 75
Website: **www.lokpal.com** | E-mail: **info@lokpal.com**

MINI LIFT

hulk
ISO 9001:2000 CERTIFIED

Mini Lift (Remote Control Available)

300kg

Specifications:

Capacity	300Kg.
Motor with brake	3 HP,415 V
Lifting Height	150 Feet
Boom Length	5 Feet
Wire Rope	8 mm
Gear box	Reduction Type 40:1
Rotation	360°

Convenient Light weight

4 piece design can be easily dismantled and carried from floor to floor

LOKPAL INDUSTRIES

A-6, Sector-3, Noida-201301, U.P., India | Tel.: +91-120-3065372 / 75

Website: **www.lokpal.com** | E-mail: **info@lokpal.com**

MONKEY LIFT

hulk
ISO 9001:2000 CERTIFIED

Monkey Lift
(Remote Operated)
500kg

The Ideal Lift for Heavy Duty Work.

Specifications:

Capacity	500Kg.
Motor	5 HP 415 V
Boom Length	6 Feet
Lifting Height	250 Feet
Wire Rope	10 mm
Gear box	Reduction Type 30:1
Rotation	360°

LOKPAL INDUSTRIES

A-6, Sector-3, Noida-201301, U.P., India | Tel.: +91-120-3065372 / 75
Website: **www.lokpal.com** | E-mail: **info@lokpal.com**

hulk
ISO 9001:2000 CERTIFIED

Building Hoist

(Self Installing Type)

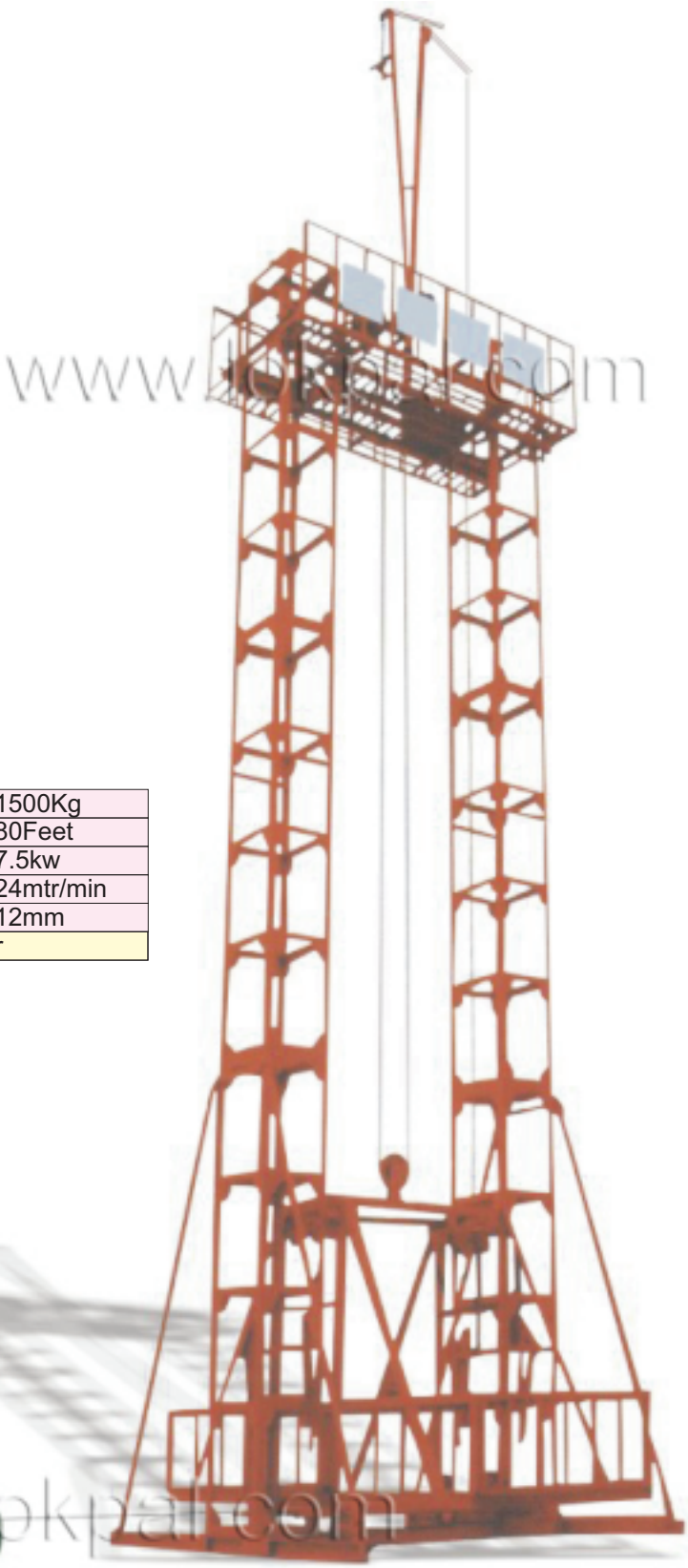

Specifications:

Capacity	1500Kg
Lifting Height	80Feet
Power	7.5kw
Speed	24mtr/min
Rope Dia	12mm
Self Height Installer	

LOKPAL INDUSTRIES
A-6, Sector-3, Noida-201301, U.P., India | Tel.: +91-120-3065372 / 75
Website: **www.lokpal.com** | E-mail: **info@lokpal.com**

hulk
ISO 9001:2000 CERTIFIED

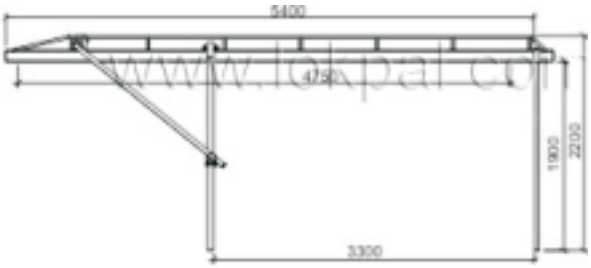

Mini Lift
(Channel Type)

Specifications:

Cross Travel	4750mm
Max. Lifting Capacity	500Kg
Motor	1.5 kw/3Phase
Max. Lifting Height	100mtr wire rope Single / 50mtr Dual Wire rope

NEW

Mini Lift
(Counter Weight Type)

LOKPAL INDUSTRIES
A-6, Sector-3, Noida-201301, U.P., India | Tel.: +91-120-3065372 / 75
Website: **www.lokpal.com** | E-mail: **info@lokpal.com**

SCAFFOLDING HOIST

hulk
ISO 9001:2000 CERTIFIED

NEW

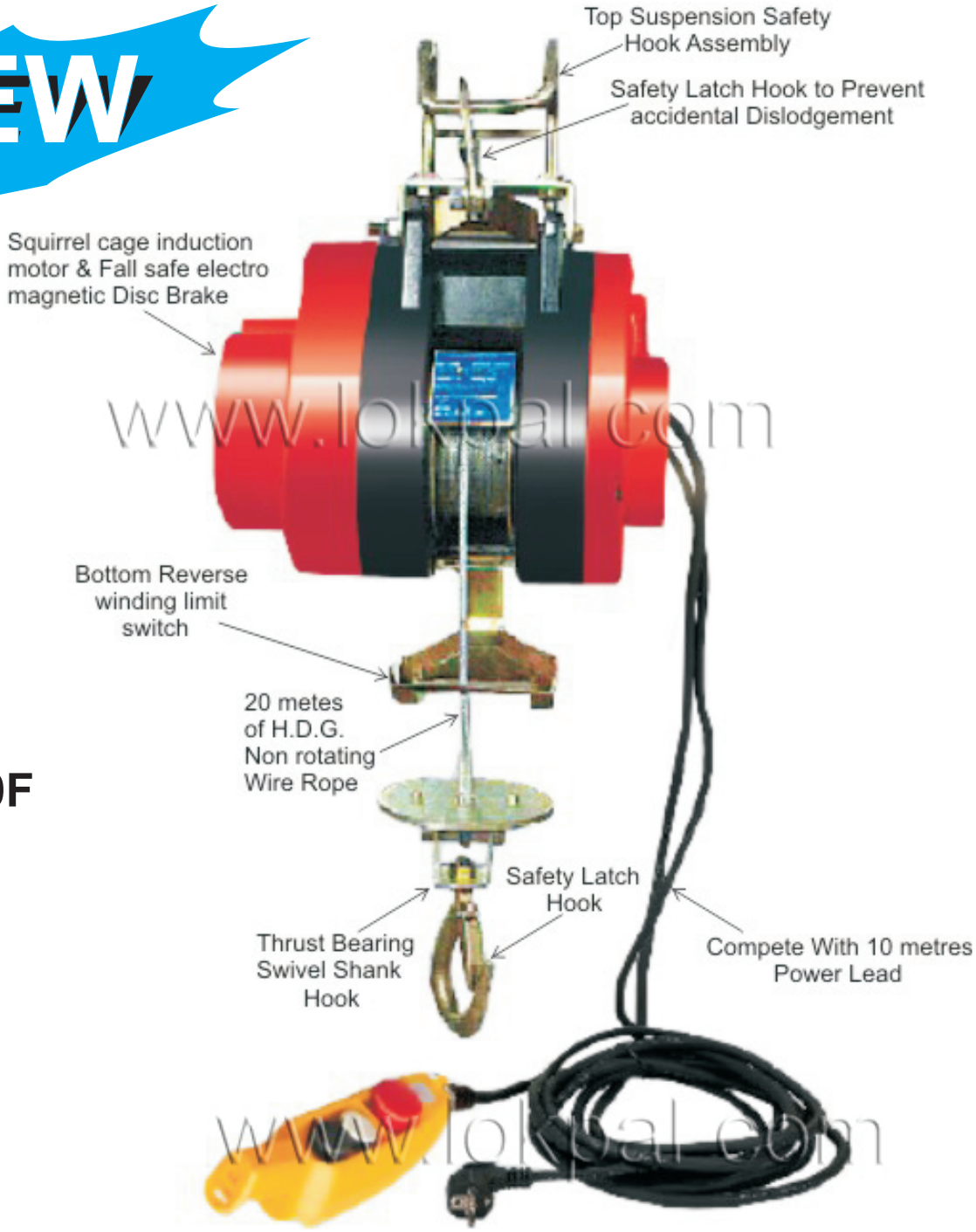

HXS-250F

Specifications:

Model	HXS-250F
Roated Load(Kg)	250
Roted Volt(V)	50/60Hz
Input Power (W)	1200
Cable Diameter(mm)	Ø4.2
Lifting Speed(m/min)	12
Lifting Height(m)	20
G.W./N.W.(Kg)	30/29
Packing Size(mm)	425x365x370

Scaffolding Hoist

Can be Suspended form the existing Scaffolding

No additional expense for Suspension device

LOKPAL INDUSTRIES
A-6, Sector-3, Noida-201301, U.P., India | Tel.: +91-120-3065372 / 75
Website: **www.lokpal.com** | E-mail: **info@lokpal.com**

SCAFFOLDING ARM HOIST

hulk
ISO 9001:2000 CERTIFIED

NEW

Specifications:

Model	WT-G2
Rated Capacity	200kg
Lifting Height	30m
Lifting Speed	17m/min
Power	750W
Cable length	31.5m
Cable diameter	4mm
Drum Length	89mm
Drum diameter	78mm
Rotate speed	1400rpm
Gear Ratio	01:25.9
Anti-resistance force	1960N/mm
Leveled distance of supporting hook	
Minimum	900mm
Maximum	1200
Machine Weight	50kg

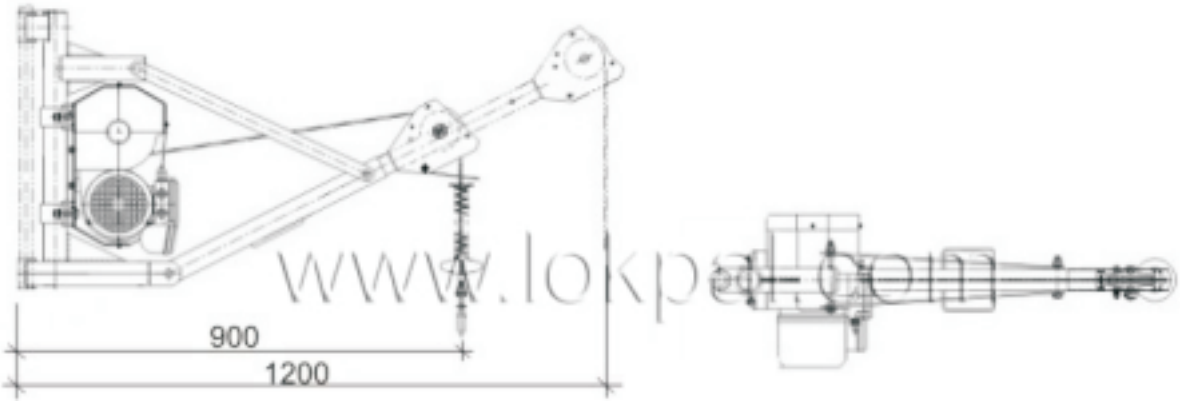

Can be Suspended form the existing Scaffolding
No additional expense for Suspension device

LOKPAL INDUSTRIES

A-6, Sector-3, Noida-201301, U.P., India | Tel.: +91-120-3065372 / 75
Website: **www.lokpal.com** | E-mail: **info@lokpal.com**

MULTI SCISSOR LIFTABLE

hulk
ISO 9001:2000 CERTIFIED

Multi Scissor Liftable

Specifications:

Model	Capacity	Platform Height		Platform Size	Weight
	Kg	Max. mm	Min. mm	mm	Kg
HLT 5-6	500	6000	1300	1780x840	1100
HLT 5-9	500	9000	1400	2000x1000	1400
HLT 5-11	500	11000	1600	2150x1200	2100
HLT 5-12	500	12000	1600	2350x1350	2300
HLT 5-14	500	14000	2000	2600x1500	3100
HLT 3-16	300	16000	2100	2800x1500	3200

LOKPAL INDUSTRIES

A-6, Sector-3, Noida-201301, U.P., India | Tel.: +91-120-3065372 / 75

Website: **www.lokpal.com** | E-mail: **info@lokpal.com**

AERIAL WORK PLATFORM SINGLE MAST

hulk
ISO 9001:2000 CERTIFIED

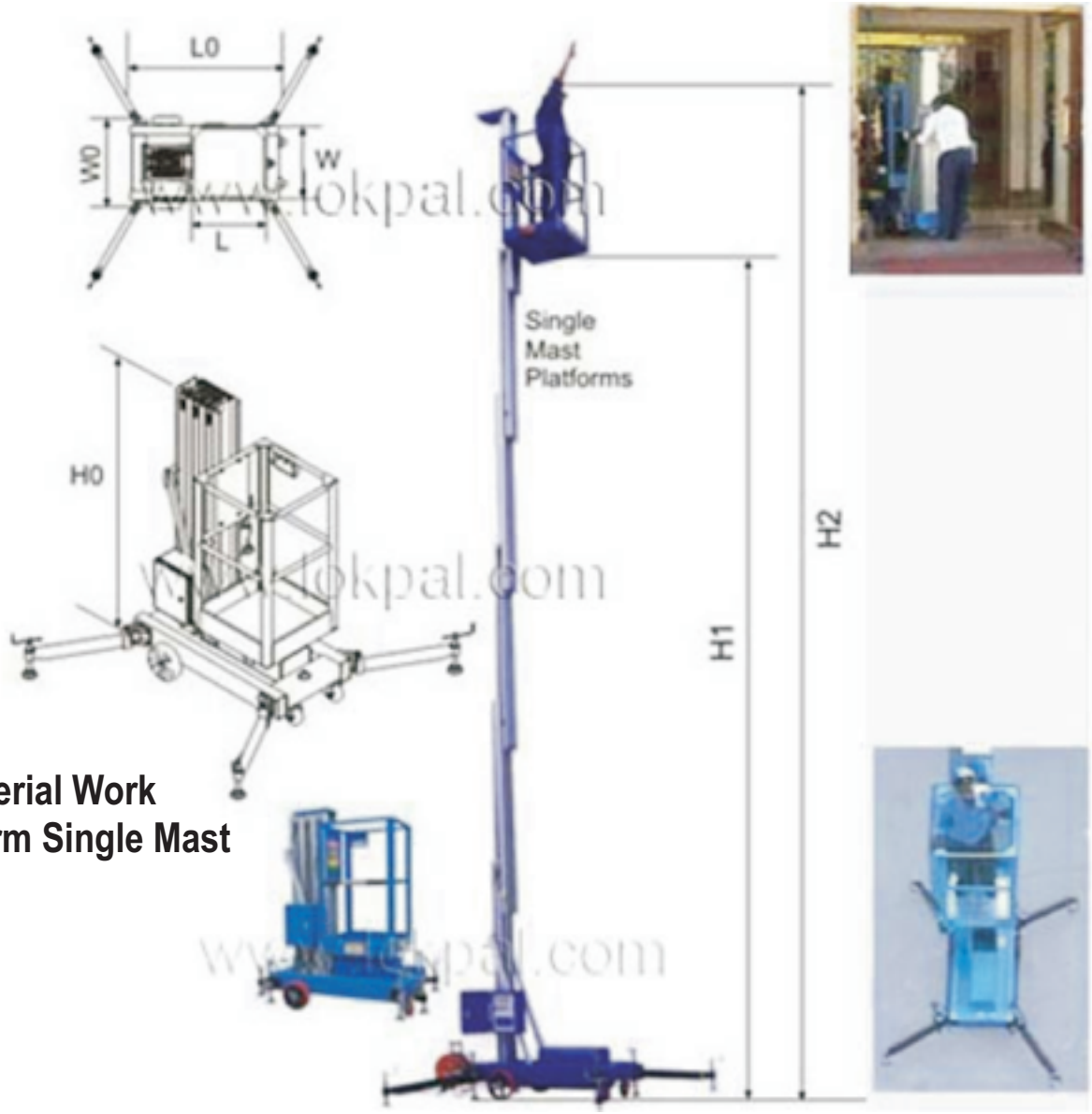

Aerial Work Platform Single Mast

Features

The stored dimensions for most models are such that the equipment can easily pass through most standard door frames as well as can easily be transported to different levels in medium sized lifts/elevators. For efficient usage in Airports, Hotels, Malls, Hospital Amusement Parks and Industries etc.

Specifications:

Mast		Max.	Max.	Load	Platform	Power	Stored	Machine
		Platform	Working	Cap.	Dimension	Supply	Dimensions	Weight
	Model	Height(H1)	Height (H2)		L x W		L0 x W0 x H0	
		mm	mm	Kg	mm	Volt	mm	kg
Single	AWPL-1006	6	7.7	135	610x660	AC 220V	1295 x 885 x 1980	210
	AWPL-1008	7.5	9.2	125	610x660	AC 220V	1295 x 885 x 1980	250
	AWPL-1009	9	10.7	125	610x660	AC 220V	1395 x 885 x 1980	280

LOKPAL INDUSTRIES
A-6, Sector-3, Noida-201301, U.P., India | Tel.: +91-120-3065372 / 75
Website: **www.lokpal.com** | E-mail: **info@lokpal.com**

MULTI MAST PLATFORM

hulk
ISO 9001:2000 CERTIFIED

Multi Mast Platform

Features

For higher capacities, greater lifting height and/or where the application requires a larger platform size and load capacity Multi Mast Aerial Work Platforms are available. Dual Mast Platforms are available up to a working height of 13.7 mtrs and maximum platform height of 12 mtrs. Four mast platforms are available up to a maximum platform height of 14 mtrs.
All Multi Mast Work Platforms have foldable railings, which can be folded for compact storage and easy maneuverability through low doorframes.

Specifications:

Mast		Max.	Max.	Load	Platform	Power	Stored	Machine
		Platform	Working	Cap.	Dimension	Supply	Dimensions	Weight
	Model	Height (H1)	Height (H2)		L x W		L0 x W0 x H0	
		mm	mm	Kg	mm	Volt	mm	kg
Double	AWPL-2008	7.5	9.2	200	1200x600	AC 220V	1395x885x2030	385
Double	AWPL-2009	9	10.7	200	1200x600	AC 220V	1395x885x2030	435
Double	AWPL-2010	10.5	12.2	200	1400x600	AC 220V	1630x1020x2030	490
Double	AWPL-2012	12	13.7	160	1400x600	AC 220V	1630x1020x2030	560
Four	AWP-4014	14	15.7	200	1560x800	AC 220V	1700x1130x2480	1230

LOKPAL INDUSTRIES
A-6, Sector-3, Noida-201301, U.P., India | Tel.: +91-120-3065372 / 75
Website: **www.lokpal.com** | E-mail: **info@lokpal.com**

CONSTRUCTION HOISTS

hulk
ISO 9001:2000 CERTIFIED

General Building Hoist

The multifunctional building hoist can be used for transporting men and materiel. It is much more efficient and safe compared to the conventional wire rope windlass systems in use, Our hoists use Rack and Pinions for lifting which is very safe, Compared to wire rope types and other conventional methods.

The rack and pinions are made from special alloy steels and are heat treated for strength and wear resistance.

TECHNICAL DATA		
MODEL	**SC100**	**SC150**
Rated Capacity	1000 kg	1500 kg
Cage Size (Outer)	2.1x1.2x2.2	3.0x1.5x2.5
No of Cages	1	1
Height (Max Possible)	150 mtr	200 mtr
Lifting Speed	33m/min	33m/min
Motor Power	2x7.5 kw	2x11 kw
Mast Section	Ø60x4.5 thick 450mmx450mmx1508mm	Ø76x4.5 thick 650mmx650mmx1508mm
Voltage	415 V - 50 Hz	415 V - 50 Hz
Safety Device Model	SAJ30-1.2	SAJ30-1.2

LOKPAL INDUSTRIES

A-6, Sector-3, Noida-201301, U.P., India | Tel.: +91-120-3065372 / 75

Website: **www.lokpal.com** | E-mail: **info@lokpal.com**

CONSTRUCTION HOISTS

hulk
ISO 9001:2000 CERTIFIED

www.lokpal.com

Anti Drop
Safety Device

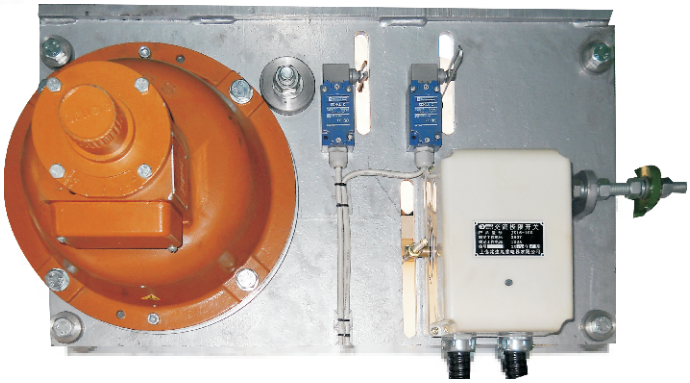

LOKPAL INDUSTRIES
A-6, Sector-3, Noida-201301, U.P., India | Tel.: +91-120-3065372 / 75
Website: **www.lokpal.com** | E-mail: **info@lokpal.com**

CONSTRUCTION HOISTS

hulk
ISO 9001:2000 CERTIFIED

Galvanized Mast Section with Rack

Geared Brake Motor with Reducer

www.lokpal.com

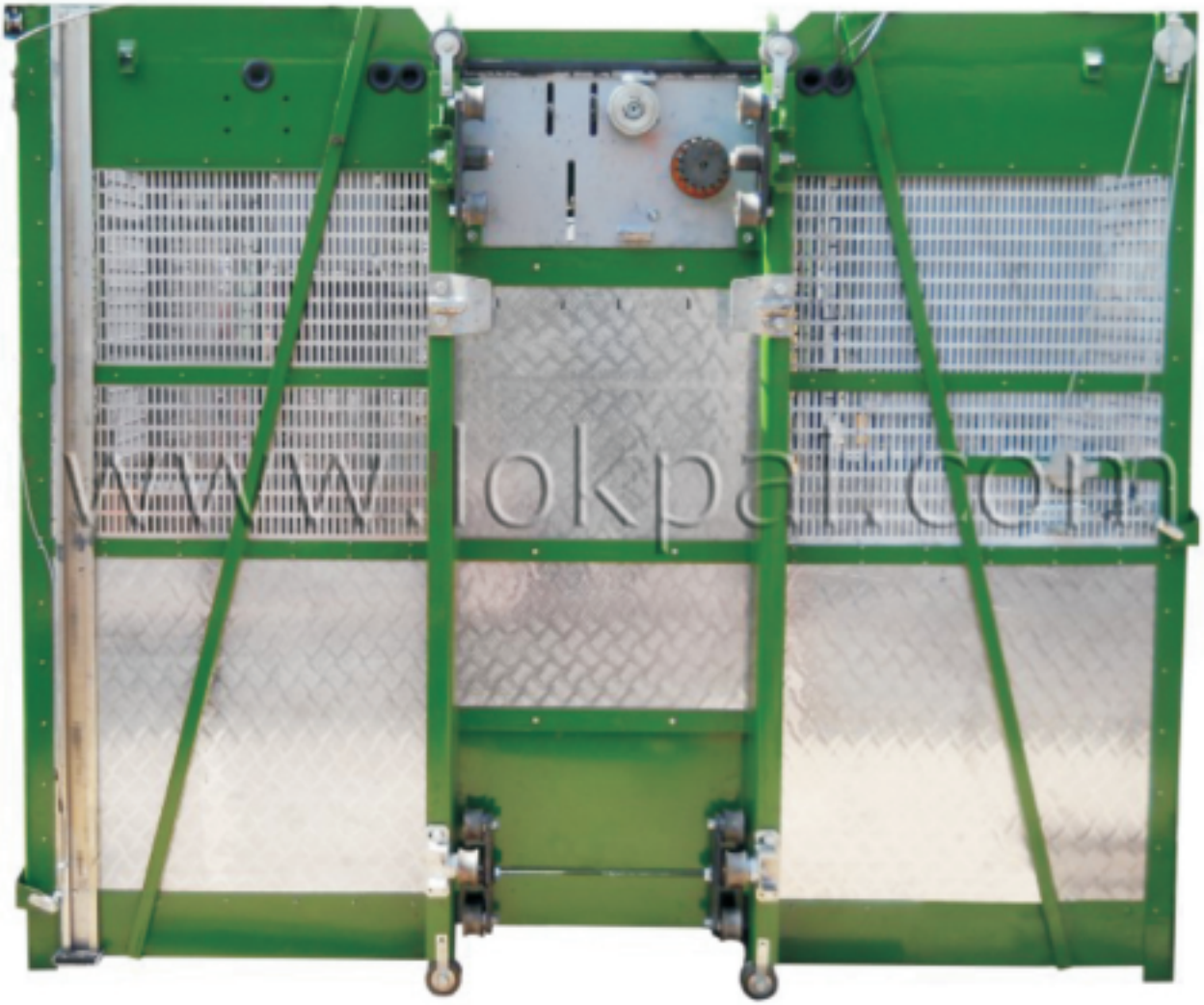

www.lokpal.com

LOKPAL INDUSTRIES
A-6, Sector-3, Noida-201301, U.P., India | Tel.: +91-120-3065372 / 75
Website: **www.lokpal.com** | E-mail: **info@lokpal.com**

FOUR POST PARKING LIFT DFP608

hulk
ISO 9001:2000 CERTIFIED

DFP608E, DFP608NE, DFP608FE

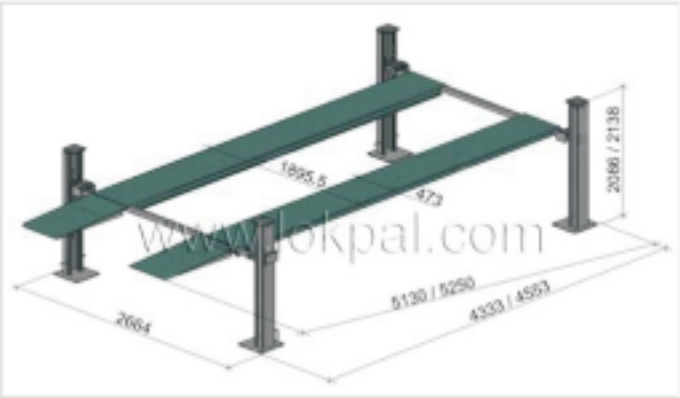

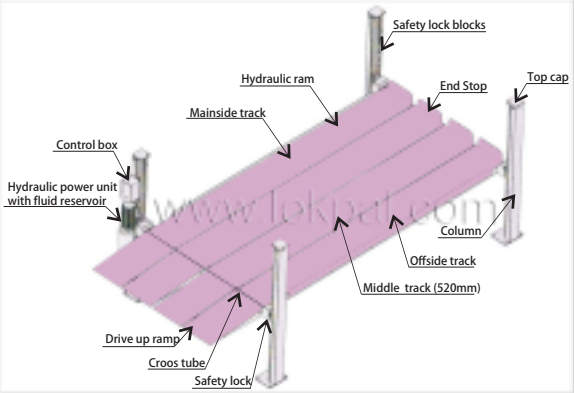

DFP-608FE* (4 Pieces platforms)

Specifications :

DFP608NE		DFP608** / 608E / 608FE		Features
Lifting capacity	3700kgs	Lifting capacity	3700kgs	Safety locks on all post for added safety
Lifting height	1900mm	Lifting height	1800mm	Manual single point lock release / electric lock release
Overall height	2138mm	Overall height	2086mm	Diamond plate non skid runway and ramps for easy use
Width between posts	2353mm	Width between posts	2353mm	Complete cover under runways to protect your vehicle
Width between runways	949.5mm	Width between runways	949.5mm	Free drip trays
Up/Down time	60/90Sec	Up/Down time	60/90Sec	Free caster kit for moving the lift from place to place
Power	2.20v	Power	2.20v	

LOKPAL INDUSTRIES
A-6, Sector-3, Noida-201301, U.P., India | Tel.: +91-120-3065372 / 75
Website: **www.lokpal.com** | E-mail: **info@lokpal.com**

TWO POST PARKING LIFT DTPP607 / DTPP607N

hulk
ISO 9001:2000 CERTIFIED

Low Cost

Light duty parking

lift for small car

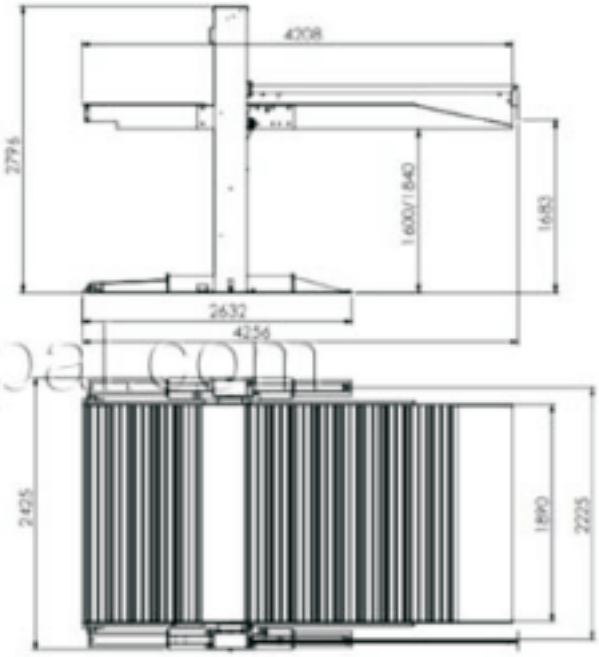

Specifications :

	DTPP607	DTPP607N
Lifting capacity	3200kgs	2200kgs
Lifting height	1800mm	1600mm/1800mm
Platform width	2120mm	1890mm
Overall width	2646mm	2424mm
Overall length	4303mm	4256mm
Power	2.20v	2.20v

Features

Instantly double your parking space
Ideal for Indian conditions.
Electric lock release.
Simple installation.
Diamond plate runway and ramps for easy to use.
Complete cover under runways to protect your vehicle.

LOKPAL INDUSTRIES

A-6, Sector-3, Noida-201301, U.P., India | Tel.: +91-120-3065372 / 75
Website: **www.lokpal.com** | E-mail: **info@lokpal.com**

TWO POST PARKING LIFT DEP606

hulk
ISO 9001:2000 CERTIFIED

Tilting Deck ensures low car height for use in low head room areas

DEP606 (Tilted Deck)

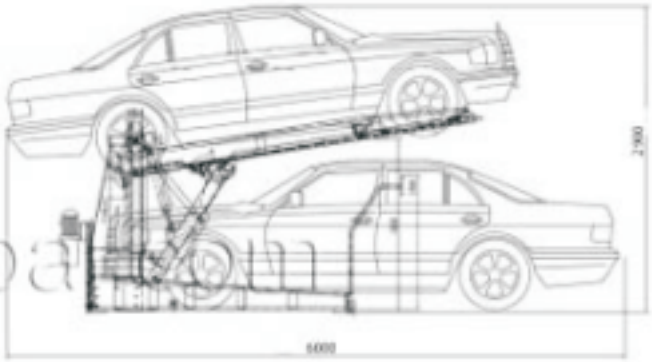

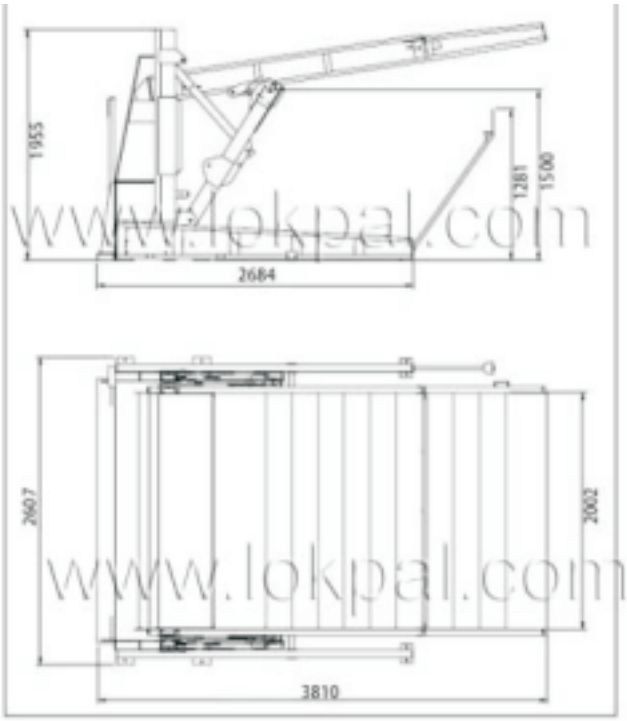

Features

Easy operation
Safe performance
Convenient parking
Easy and quick installation
Used for residential and office buildings

Specifications :

DEP606	
Lifting capacity	2700kgs
Lifting height	1900mm
Max width	2500mm
Overall height	1955mm
Power	2.20v

LOKPAL INDUSTRIES
A-6, Sector-3, Noida-201301, U.P., India | Tel.: +91-120-3065372 / 75
Website: **www.lokpal.com** | E-mail: **info@lokpal.com**

TWO POST PARKING SYSTEM DTPP606

hulk
ISO 9001:2000 CERTIFIED

Save space with shared columns for multiple units parking

Features

They are engineered to lift motor vehicles for parking purposes but also suitable for car dealers to use as a showcase.

Multi-channel safety protection.

Multiple units can be linked via sharing the common column.

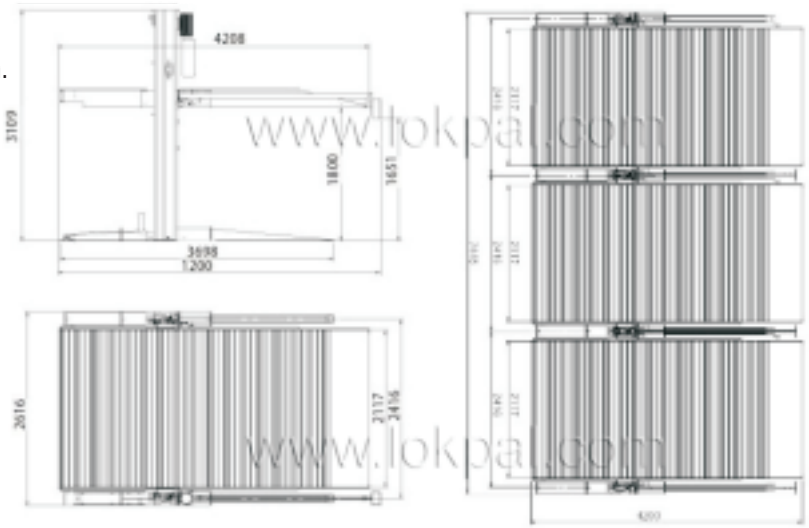

Specifications :

DTPP606	
Lifting capacity	2700kgs
Lifting height	1600mm/1800mm
Overall height	3109mm
Platform width	2117mm
Per unit: parking	2 cars

LOKPAL INDUSTRIES

A-6, Sector-3, Noida-201301, U.P., India | Tel.: +91-120-3065372 / 75

Website: **www.lokpal.com** | E-mail: **info@lokpal.com**

SCISSOR PARKING LIFT DSPL606

hulk
ISO 9001:2000 CERTIFIED

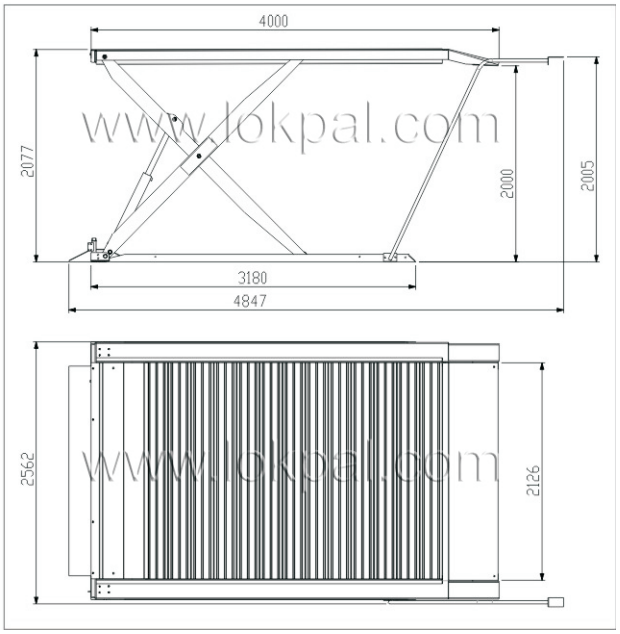

Specifications :

DSPL606		Features
Lifting capacity	2200kgs	Light weight, easy to move, No obstructions of columns
Lifting height	1950mm	
Lifting Speed	3.5m/min	

LOKPAL INDUSTRIES

A-6, Sector-3, Noida-201301, U.P., India | Tel.: +91-120-3065372 / 75

Website: **www.lokpal.com** | E-mail: **info@lokpal.com**